Pick up of atoms and molecules in helium droplets and helium jets

Location: CEA Saclay

Researcher in charge of the Trainees: Marc André Gaveau & Benoit Soep

Maximum number of Trainees: 3

Morning: Helium droplets

A continuous helium cluster beam is produced from a cold source (T_0=10 K, P_0 = 10 bars). Calcium atoms are deposited on these clusters by the pick-up technique, i.e. by collisional capture when passing through a heated cell containing a low vapor pressure of this metal.

When two Ca atoms are deposited on the helium cluster, they form a Ca_2 molecule that is stabilized at the helium cluster temperature (0.38K). We will excite these species with a laser beam at 380 nm and record the fluorescence spectrum.

Afternoon: Molecule pickup in laser evaporation for spectroscopic analysis of fragile molecules

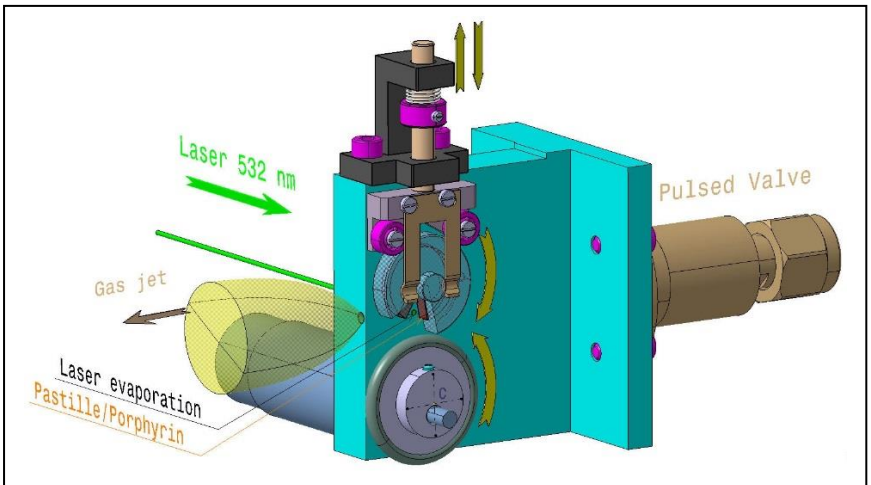

Figure 1 : laser evaporation set-up

A pulsed evaporation setup is used to provide an intense a stable source of fragile molecules cooled at ~20K by supersonic expansion. The molecules are examined by laser ionization, time of flight mass spectrometry and velocity map imaging using tunable visible / UV lasers.

A wide variety of large fragile biomimetic molecules can be examined, among them porphyrins since these are vaporized intact for an extended period of time.

A mass spectrum will be recorded characterizing the product and the origin band of the optical transition will be observed and identified.